Schutzvermerk nach DIN34 beachten

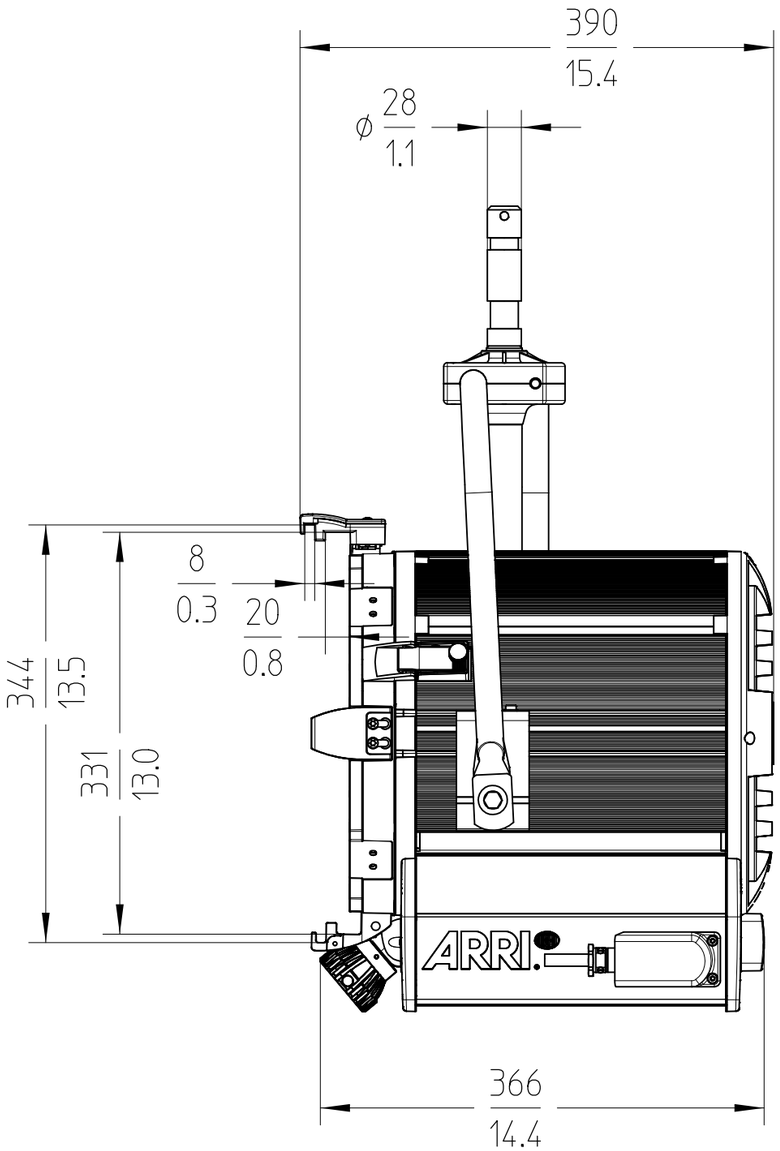


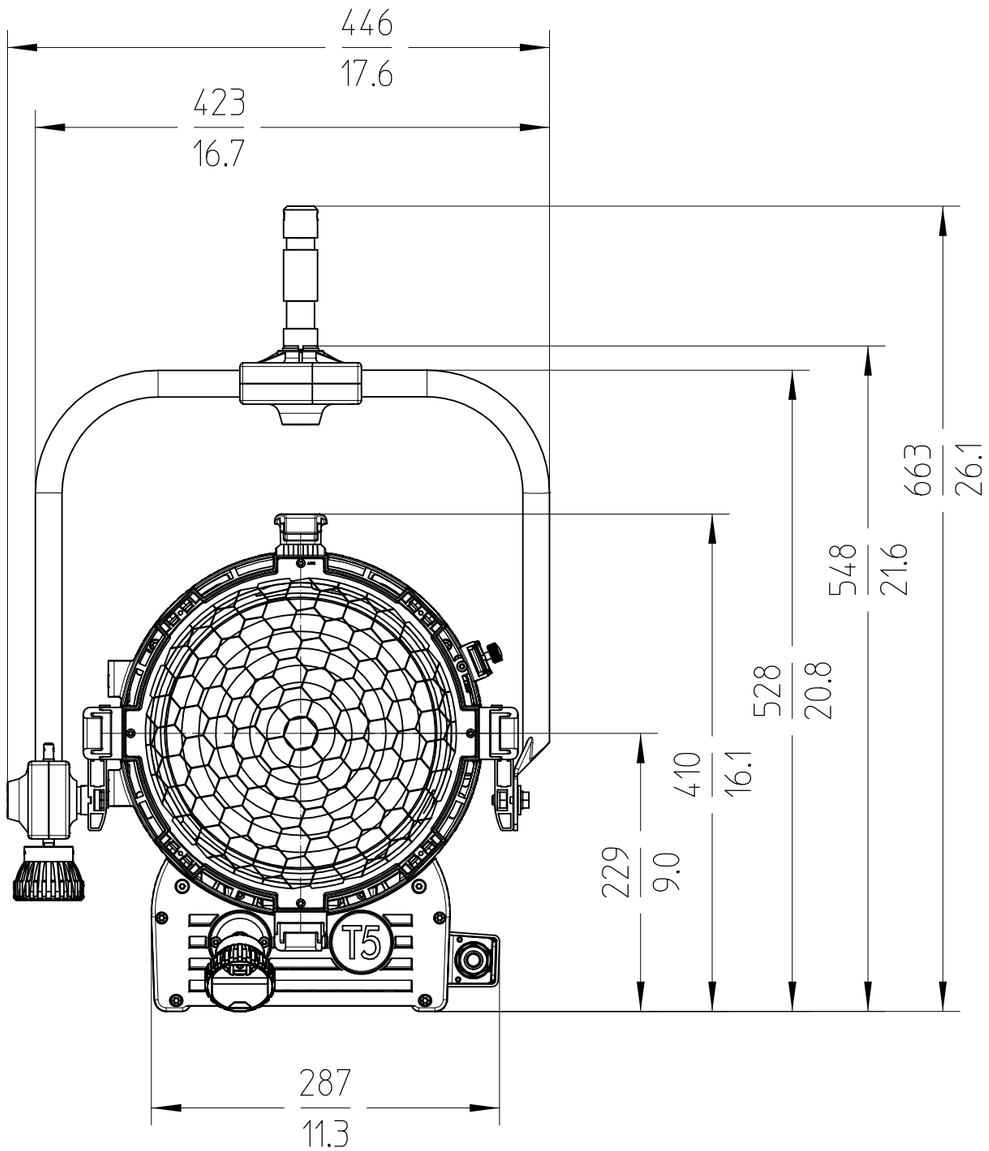


| | | | |
|---|---|---|---|
| Scheinwerfertyp<br>type of lamphead | True Blue T5 Pole Operated (P.O.) | | |
| Leuchtmittel / Lampensockel<br>lamp / lamp base | 230 V: (CP/29)<br>230 V: (CP/85) | 5000 W / G38 | |
| Linsen<br>lenses | ∅ 250 mm<br>∅ 9.8" | | |
| Zubehördurchmesser<br>accessories diameter | ∅ 330 mm<br>∅ 13" | ∅ 344 mm<br>∅ 13.5" | |

| | |
|---|---|
| Packmass<br>packed size | 495 x 510 x 555 mm (H x B x L)<br>19.49 x 20.08 x 21.85" (H x W x L) |
| Packvolumen<br>packed volume | 143,06 l<br>5.04 ft³ |
| Anmerkung / notes<br>Gewicht inklusive Bügel und Zapfen<br>Weight includes yoke and spigot | |
| Version / Stand<br>version / as at... | 2.0 / 17.10.2018 |

| Bezeichnung<br>description | | Gewicht<br>weight | | Packgewicht<br>packed weight | |
|---|---|---|---|---|---|
| Ident Nr. | Version | kg | lbs. | kg | lbs. |
| L1.40000.J | bare ends, 120V | 12 | 26.5 | 17 | 37.5 |
| L1.40005.J | bare ends, black 120V | 12 | 26.5 | 17 | 37.5 |
| | | | | | |
| | | | | | |
| | | | | | |
| | | | | | |
| | | | | | |

ARRI

Arnold & Richter Cine Technik
Pulvermuehle
D-83071 Stephanskirchen