Schutzvermerk nach DIN34 beachten

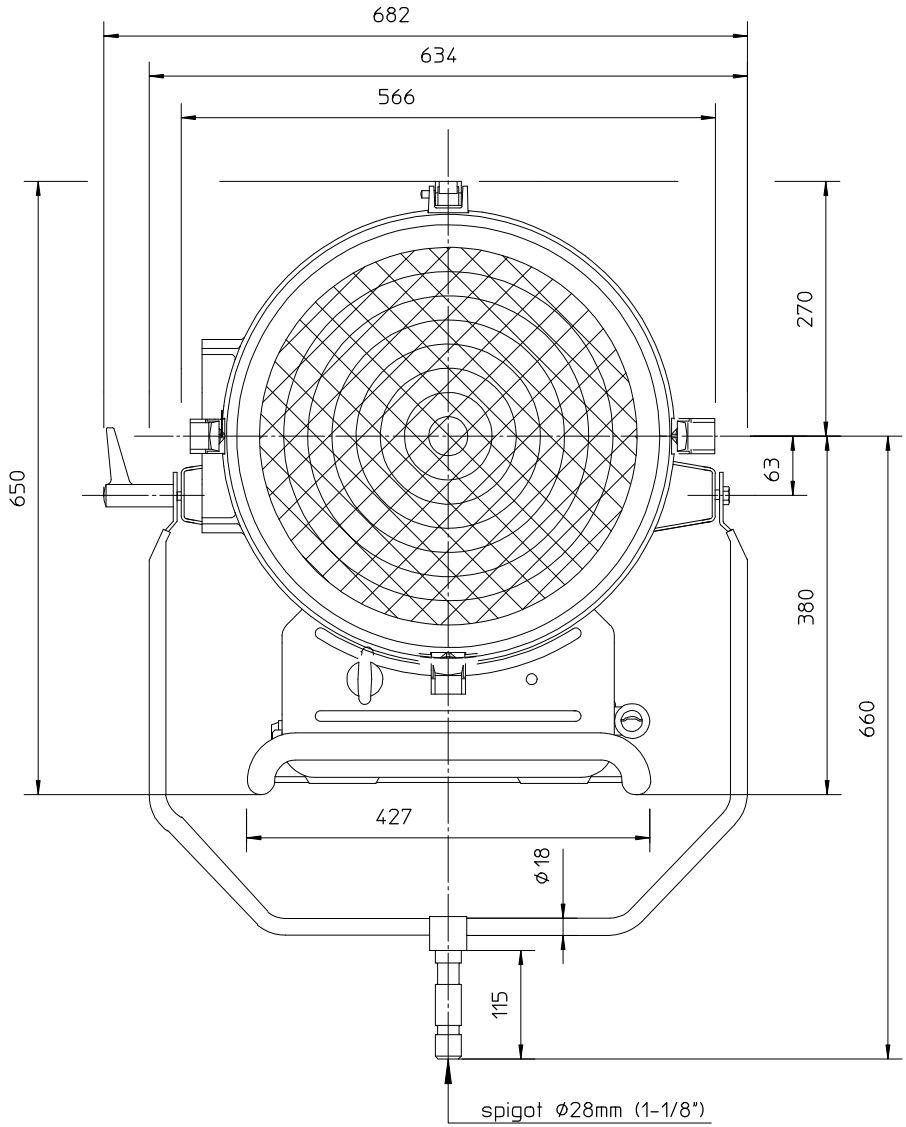

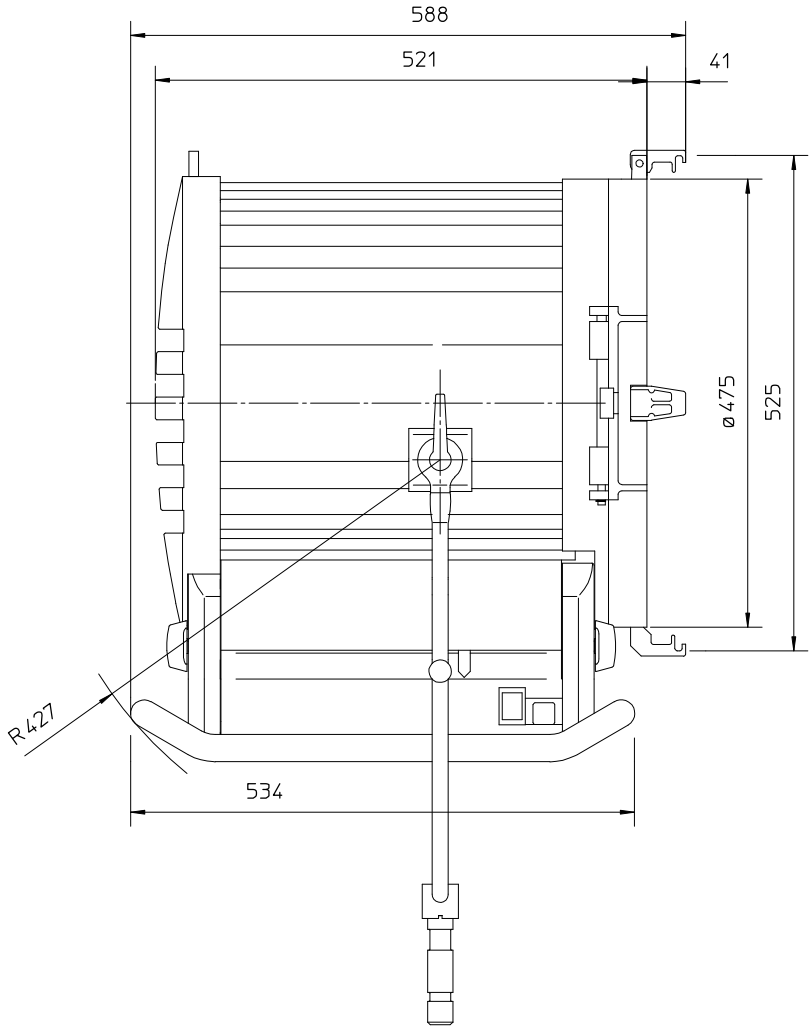

Scheinwerfertyp type of lamphead	Compact 6000W	Linsen lenses	∅ 420 mm ∅ 16.5 "	Packmass packed size	700x720x770 mm 27.56x28.35x30.31 "	Gewicht net weight	32,9 kg 72,5 lbs	ARRI Arnold & Richter Cine Technik Pulvermuehle D-83071 Stephanskirchen
Leuchtmittel lamp	HMI 6000W/SE	Zubehoer accessories	∅ 495 mm ∅ 19.5 "	Packvolumen packed volume	388.08 l 13.705 ft3	Dateiname file name	c6000_mb_02	
Lampensockel lamp base	G38	Fluegeltor barndoor	∅ 510 mm ∅ 20 "	Packgewicht packed weight	38.5 kg 84.88 lbs	Version / Stand version / as at...	1.1/06.07.06	