Schutzvermerk nach DIN34 beachten

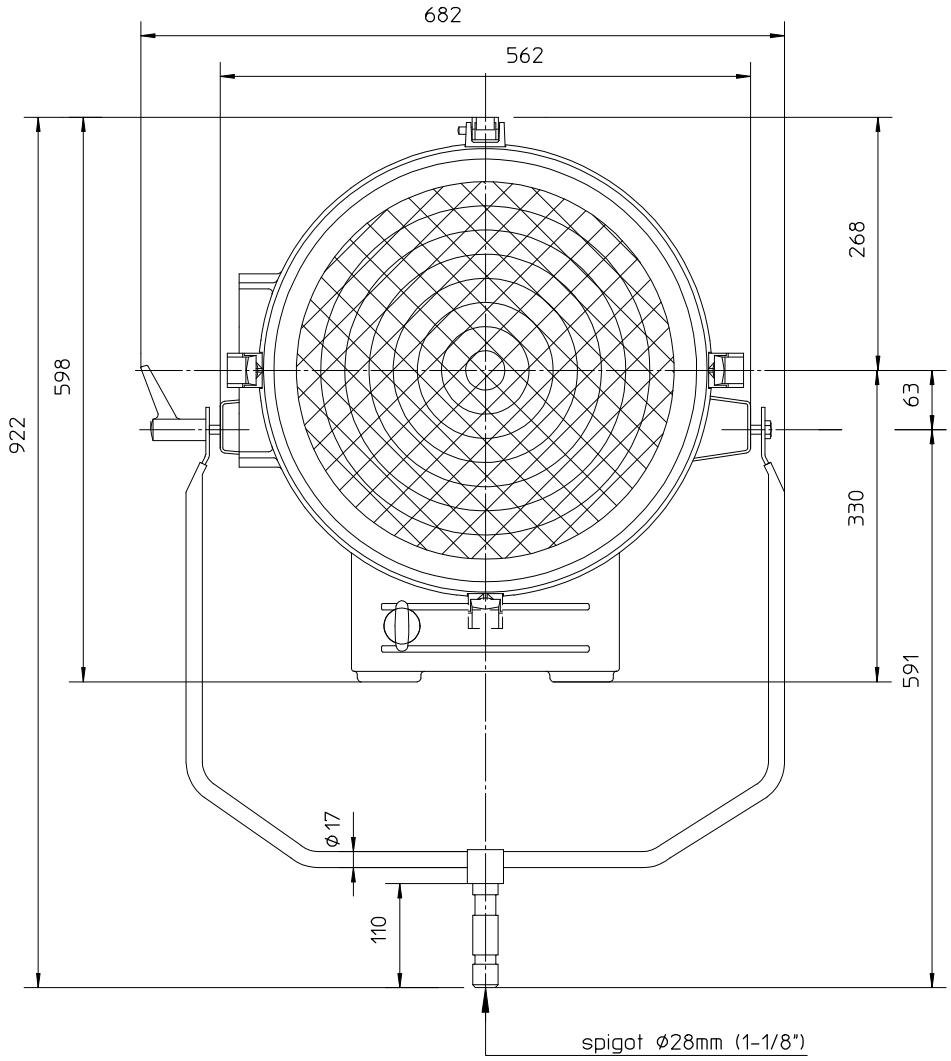

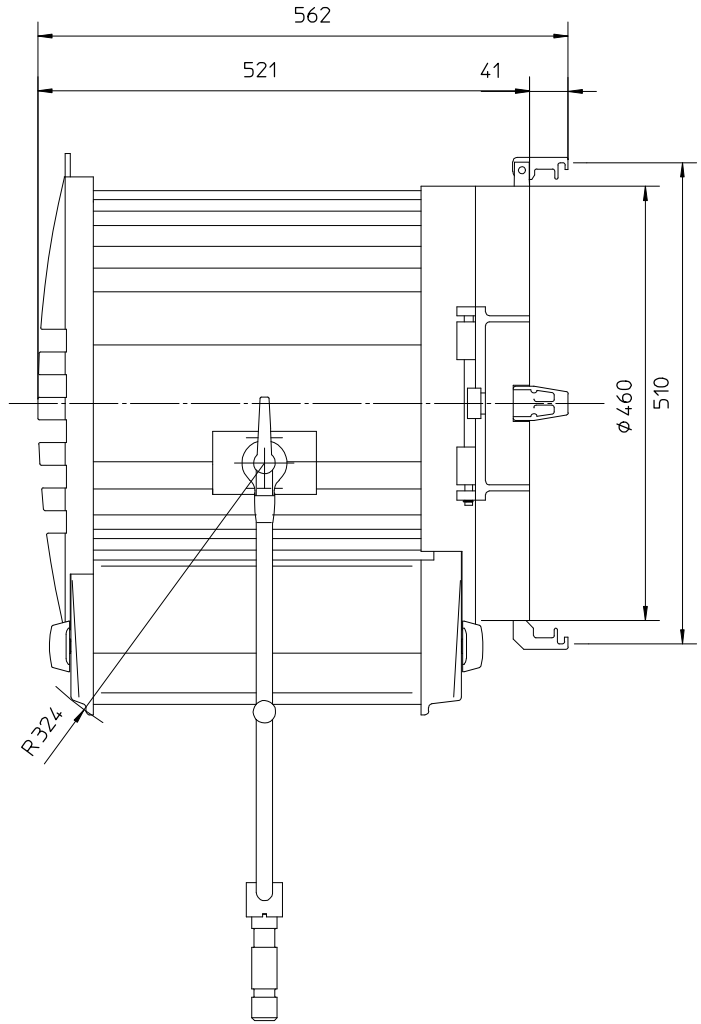

Scheinwerfertyp type of lamphead	Studio T12	Linsen lenses	∅ 420 mm ∅ 16.5 "	Packmass packed size	695x725x775 mm 27.36x28.54x30.51 "	Gewicht net weight	25.5 kg 56.22 lbs	ARRI Arnold & Richter Cine Technik Pulvermuehle D-83071 Stephanskirchen
Leuchtmittel lamp	230V:KP120H-230V 120V:KP120H-120V	Zubehoer accessories	∅ 495 mm ∅ 19.5 "	Packvolumen packed volume	390.5 l 13.790 ft3	Dateiname file name	st_t12_mb_02	
Lampensockel lamp base	G38	Fluegeltor barndoor	∅ 510 mm ∅ 20.1 "	Packgewicht packed weight	31.5 kg 69.44 lbs	Version / Stand version / as at...	1.1/11.07.06	